NOTES :

- Print on A3 format,color,double-sided,short side, without margin -
- Folding possible in 3 sections following the dotted lines -

- Acknowledgements to Léonie SARRAZIN, a "Product Designer" apprentice at THALES SIX, for designing the cover illustration -

Multiple formats available on francecao.fr (dynamic tables, this flyer, tools, training ...)

FRANCE CAO

Official full document

afnor NORMALISATION

Afnor Spec 2212 WG

GROUP ACB

acsiel Alliance Electronique

ACTIA®

ASTER TECHNOLOGIES

CIMULEC GROUPE

id3 Technologies

MBDA

SAFRAN

GROUPE SEB

THALES Building a future we can all trust

afnor SPEC 2212

afnor SPEC 2212

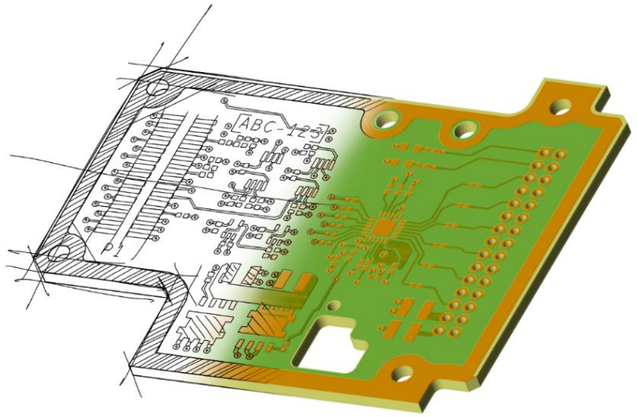

Printed boards — Routing parameters

23th February 2024- 001

afnor SPEC 2212

Component types	Pitch (mm)	Preferred Routing Classes							
		RC1-3	RC4	RC5	RC6	RC7	RC8	RC9	RC10
Matrix component (BGA or similar	2,54	✓	✓						
	1,27		✓	✓	✓				
	1,0			✓	✓	✓			
	0,8				✓	✓			
	0,65				✓	✓	✓		
	0,5					✓	✓	✓	
	0,4						✓	✓	✓
	0,3							✓	✓
SMC: QFP, QFN, connectors, discrete components, etc.	> 0,5	✓	✓	✓					
	0,5			✓	✓	✓			
	< 0,5					✓	✓	✓	✓
Through-hole component	2,54	✓	✓	✓					
	1,27				✓	✓			
	1,0						✓		

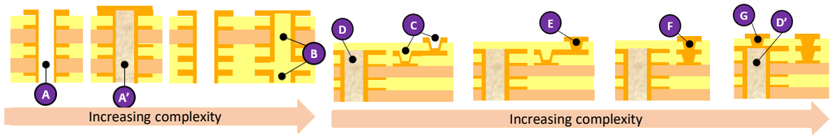

Via type/structure		Routing Classes							
		RC1 -3	RC4	RC5	RC6	RC7	RC8	RC9	RC10
A	Plated-through hole/via	✓	✓	✓	✓	✓	(✓)		
A'	Plated-through hole filled with resin and capped with copper	✓	✓	✓	✓	(✓)			
B	Mechanical blind via (sequential board)	✓	✓	✓	✓	(✓)			
C	Non-copper-filled microvia				✓	✓	✓		
D	Mechanical buried via				✓	✓	✓	✓	✓
D'	Mechanical buried via filled with resin and capped					✓	✓	✓	✓
E	Copper-filled microvia (note 1)					✓	✓	✓	✓
F	Stacked microvias (note 2)					✓	✓	✓	✓
G	Stacked microvias on a buried via (note 3)						✓	✓	✓

Values are associated in the tables for each parameter/Routing Class using the following conventions: ▪ The **first** value shown is the preferred value.
▪ An additional value in brackets indicates a **limit** value that should not be exceeded and whose use should be restricted as far as possible.
▪ Values in square brackets indicate the possibility of choosing from the specified **range** of values.
▪ **N/A** (Not Applicable) or no value means a non-recommended configuration.

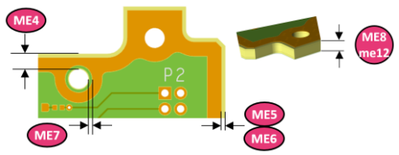

Mechanical parameters										
Parameter		Unit	RC1-3	RC4	RC5	RC6	RC7	RC8	RC9	RC10
ME1	Maximum length	Mm	≤ 550	≤ 550	≤ 550	≤ 400 (≤ 500)	≤ 300 (≤ 400)	≤ 250 (≤ 300)	≤ 100 (≤ 200)	≤ 80 (≤ 150)
ME2	Maximum width	mm	≤ 400	≤ 400	≤ 400	≤ 400	≤ 300 (≤ 400)	≤ 250 (≤ 300)	≤ 100 (≤ 200)	≤ 80 (≤ 150)
ME3	Cutting radius	mm	1,2 (0,6)	1,2 (0,6)	1,0 (0,6)	1,0 (0,5)	1,0 (0,5)	1,0 (0,4)	1,0 (0,4)	1,0 (0,4)
ME4	Edge/ non-plated-through hole distance	mm	1	1	1	1	0,5	0,5	0,5	0,5
ME5	Copper/outline routing distance	mm	0,75 (0,5)	0,75 (0,5)	0,5 (0,3)	0,5 (0,3)	0,5 (0,3)	0,5 (0,3)	0,3 (0,2)	0,3 (0,2)
ME6	Copper/scoring distance	mm	0,75 (0,5)	0,75 (0,5)	0,7 (0,5)	0,7 (0,5)	0,7 (0,5)	0,7 (0,5)	0,5 (0,4)	0,5 (0,4)
ME7	Copper/ non-platedthrough hole distance	mm	0,5 (0,3)	0,5 (0,3)	0,5 (0,3)	0,5 (0,3)	0,5 (0,3)	0,5 (0,3)	0,3 (0,2)	0,25 (0,15)
ME8	Maximum thickness	mm	3,2 (4,5)	3,2 (4,5)	3,2 (4,5)	3,2 (4,5)	3,2 (4,5)	2,4 (3,2)	2,4 (3,2)	2,4 (3,2)
me9	Routing tolerance	+/- mm	0,2 (0,1)	0,2 (0,1)	0,2 (0,1)	0,2 (0,1)	0,2 (0,1)	0,15 (0,1)	0,15 (0,1)	0,15 (0,075)
me10	Centre-to-centre spacing tolerance for non-plated-through hole	+/- mm	0,2 (0,1)	0,2 (0,1)	0,15 (0,08)	0,1 (0,08)	0,1 (0,05)	0,1 (0,05)	0,1 (0,05)	0,1 (0,025)
me11	Centre-to-centre spacing tolerance for platedthrough holes	+/- mm	0,2 (0,15)	0,2 (0,15)	0,2 (0,15)	0,15 (0,1)	0,15 (0,1)	0,1 (0,08)	0,1 (0,08)	0,1 (0,05)
me12	Thickness tolerance	%	+/- 10	+/- 10	+/- 10	+/- 10	+/- 10	+/- 10	+/- 10	+/- 10
me13	Diameter tolerance for non-plated-through holes	+/- mm	0,10 (0,05)	0,10 (0,05)	0,10 (0,05)	0,05 (0,025)	0,05 (0,025)	0,05 (0,025)	0,05 (0,025)	0,05 (0,025)
me14	Diameter tolerance for plated-through holes	+/- mm	0,10 (0,05)	0,10 (0,05)	0,10 (0,05)	0,10 (0,05)	0,10 (0,05)	0,10 (0,05)	0,10 (0,05)	0,10 (0,05)

Conductor parameters												
Parameter		Unit	RC1	RC2	RC3	RC4	RC5	RC6	RC7	RC8	RC9	RC10
CO1	Min. width	µm	700	500	300	200	150	120	100	75	60	50
CO2	Min. spacing	µm	700	500	300	200	150	120	100	75	60	50
CO3	Min. conductor/plane spacing	µm	700	500	300	200	150	150	120	100	75	60
CO4	Min. plane/via pad spacing layer with plating	µm	700	500	300	200	175 (150)	175 (150)	150 (120)	120 (100)	100 (75)	75 (60)
CO5	NSMD pad/conductor spacing	µm	700	500	300	200	150	150	150	120	120	100
CO6	SMD pad/conductor spacing	µm	700	500	300	200	150	120	100	75	60	50
CO7	Max. copper thickness (base) of a layer without via/microvia plating	µm	17,5 (35, 70, 105, 140, 175, 210)	17,5 (35, 70, 105, 140)	17,5 (35, 70, 105)	17,5 (35, 70)	17,5 (35, 70)	17,5 (35)	17,5 (35)	17,5 (17,5)	12 (17,5)	12 (17,5)
CO8	Finished copper thickness on a plated layer with plated-through vias/holes	µm	45 [45-240]	45 [45-170]	45 [45-100]	45 [45-100]	45 [45-70]	45 [30-60]	40 [25-50]			
CO9	Finished copper on a layer with platedthrough vias/holes filled with resin and capped	µm	65 [65-260]	65 [65-190]	65 [65-120]	65 [65-120]	55 [55-80]	50 [40-70]				
CO10	Finished copper on a plated layer with a microvia	µm						45 [30-60]	30 [25-40]	25 [20-30]	16 [16-20]	12 [12-16]
co11	Reduced conductor width tolerances	µm	±210 (±140)	±150 (±100)	±90 (±60)	±60 (±40)	±45 (±30)	±36 (±25)	±30 (±20)	±20 (±15)	±20 (±15)	±15 (±10)
co12	Tolerance for finished copper thickness on a plated layer	µm	-25/+35	-25/+35	-15/+30	-15/+30	-10/+25	-10/+25	-10/+20	-10/+15	-5/+15	-5/+15

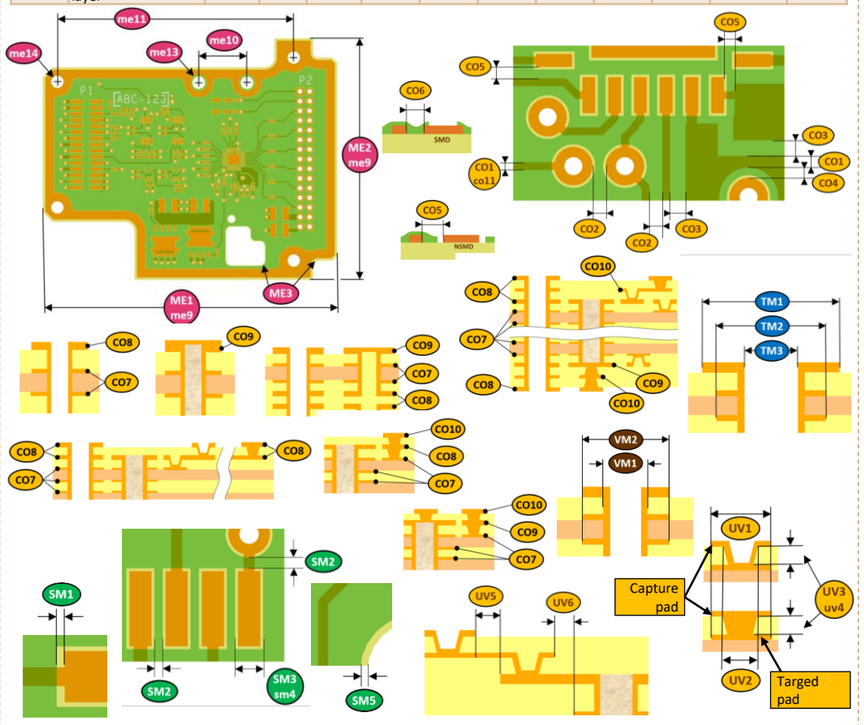

Solder mask parameters										
Parameter		Unit	RC1-3	RC4	RC5	RC6	RC7	RC8	RC9	RC10
SM1	Distance between the solder mask/soldered pad	µm	75 (50)	75 (50)	75 (50)	60 (50)	50	50 (40)	40 (30)	40 (25)
SM2	Minimum solder mask line width	µm	150	150	150	120	120 (100)	100	80	80
SM3	Minimum solder mask opening	µm	200	200	200	200	150	120	120	120
sm4	Solder mask opening tolerance	µm	+/-75	+/-75	+/-50	+/-50	+/-25	+/-25	+/-20	+/-20
SM5	Distance between the solder mask/edge or non-platedthrough hole	mm	0,5	0,5	0,5 (0,35)	0,35	0,35	0,30 (0,25)	0,25	0,25

Drilling diameter: VM1=minimum drilled hole diameter [µm]								
Thickness [mm]	RC1-3	RC4	RC5	RC6	RC7	RC8	RC9	RC10
0,2 ≤ e < 0,4	300	250	250	200	200	200	150	150
0,4 ≤ e < 0,6	300	250	250	250	200	200	200	150
0,6 ≤ e < 0,8	300	300	250	250	200	200	200	200
0,8 ≤ e < 1,0	300	300	250	250	250	200	200	200
1,0 ≤ e < 1,2	350	300	300	250	250	250	200	200
1,2 ≤ e < 1,4	350	300	300	250	250	250	250	200
1,4 ≤ e < 1,6	350	300	300	250	250	250	250	200
1,6 ≤ e < 1,8	350	300	300	250	250	250	250	250
1,8 ≤ e < 2,0	350	300	300	300	250	250	250	250
2,0 ≤ e < 2,2	400	350	350	300	300	250	250	250
2,2 ≤ e < 2,4	400	400	350	350	300	300	250	250
2,4 ≤ e < 2,6	450	400	400	350	350	300	300	300
2,6 ≤ e < 2,8	500	450	400	400	350	350	300	300
2,8 ≤ e < 3,0	500	500	450	400	400	350	350	300
3,0 ≤ e < 3,2	550	500	500	450	400	400	350	300
3,2 ≤ e < 3,4	600	550	500	450	450			
3,4 ≤ e < 4,5	850	750	700	650	600			

Via Pad diameter: VM2=minimum via pad diameter [µm]								
VM1: drilled hole diameter [µm]	RC1-3	RC4	RC5	RC6	RC7	RC8	RC9	RC10
150							400 (350)	350 (300)
200				550 (500)	500 (450)	450 (400)	450 (400)	450 (400)
250		700 (650)	650 (600)	600 (550)	550 (500)	500 (450)	500 (450)	500 (450)
300	800 (750)	750 (700)	700 (650)	640* (600)	600 (550)	550 (500)	550 (500)	550 (500)
350	850 (800)	800 (750)	750 (700)	700 (650)	650 (600)	600 (550)	600 (550)	600 (550)
VM1 ≥ 400	VM1 +500 (+450)	VM1 +450 (+400)	VM1 +400 (+350)	VM1 +350 (+300)	VM1 +300 (+250)	VM1 +250 (+200)	VM1 +250 (+200)	VM1 +250 (+200)

* Value at 640 µm for routing BGAs with a 1 mm pitch with conductors/spacings at 120 µm/120 µm.

Parameters for plated-through holes for component insertion (by soldering)										
Parameter		Unit	RC1-3	RC4	RC5	RC6	RC7	RC8	RC9	RC10
TM1	External layer pad diameter	µm	TM3 + 800 (+600)	TM3 +600 (+400)	TM3 +600 (+400)	TM3 +600 (+400)	TM3 +600 (+400)	TM3 +600 (+300)		
TM2	Internal layer pad diameter	µm	TM3 +550 (+500)	TM3 +500 (+450)	TM3 +450 (+400)	TM3 +400 (+350)	TM3 +350 (+300)	TM3 +300 (+250)		

Drilling parameters for laser-drilled microvias								
Parameter		Unit	RC1-5	RC6	RC7	RC8	RC9	RC10
UV1	Pad diameter	µm	NA	350 (300)*	300 (275)*	275 (250)*	220	200
UV2/UV3	Drilling diameter/Dielectric thickness	µm	NA	150/90 (175/110)	125/80 (150/100)	100/60 (125/80)	80/50 (100/60)	60/40 (80/50)
uv4	Dielectric thickness tolerance	%	NA	±30% (±20%)	±30% (±20%)	±30% (±20%)	±30% (±20%)	±30% (±20%)
UV5	Minimum distance between two connected microvia pads	µm	NA	≥ 0	≥ 0	≥ 0	≥ 0	≥ 0
UV6	Minimum distance between connected microvia/via pads	µm	NA	≥ 0	≥ 0	≥ 0	≥ 0	≥ 0

* The second value in brackets can be used for the capture pad of a microvia-in-pad is necesary.

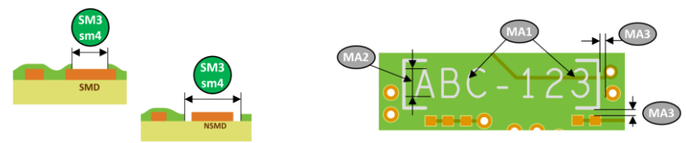

23th February 2024 - 001

Ink marking parameters										
Parameter		Unit	RC1-3	RC4	RC5	RC6	RC7	RC8	RC9	RC10
MA1	Minimum character line width	mm	0,2 (0,15)	0,2 (0,15)	0,2 (0,15)	0,15 (0,10)	0,15 (0,10)	0,1 (0,08)	0,1 (0,08)	0,1 (0,08)
MA2	Minimum character height	mm	2,0 (1,5)	2,0 (1,5)	2,0 (1,5)	1,5 (1)	1,5 (1)	1,0 (0,8)	1,0 (0,8)	1,0 (0,8)
MA3	A3 Minimum distance between the marking/exposed copper	mm	0,3	0,3	0,3	0,3	0,2	0,2	0,1	0,1